# 8" Slab and Reinforcing Geometry

**These tables are for general descriptive purposes only.**
Actual design load tables are dependent on local codes and standards, material properties and product end usage.



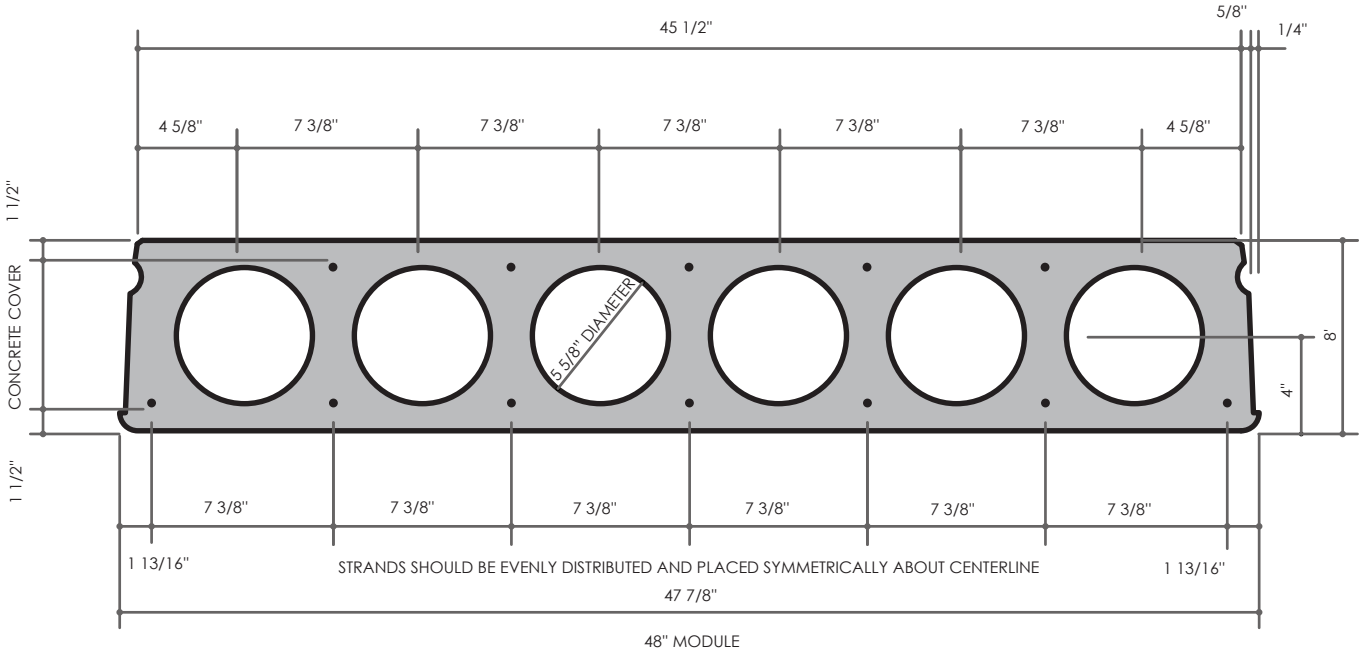


## Load Table of Allowable Superimposed Service Loads in Pounds / sq. ft.

| Strand | Area of Steel ($In^2$) | □Mn (kip-ft.) | Span in Feet | | | | | | | | | | | | | | | | | | | | | |
|---|---|---|---|---|---|---|---|---|---|---|---|---|---|---|---|---|---|---|---|---|---|---|---|---|
| | | | 14 | 15 | 16 | 17 | 18 | 19 | 20 | 21 | 22 | 23 | 24 | 25 | 26 | 27 | 28 | 29 | 30 | 31 | 32 | 33 | 34 | 35 |
| 4 - 3/8" | 0.340 | 42 | 158 | 132 | 110 | 93 | 78 | 66 | 55 | 46 | | | | | | | | | | | | | | |
| 5 - 3/8" | 0.425 | 52.1 | 206 | 174 | 147 | 126 | 107 | 92 | 79 | 67 | 58 | 49 | 41 | 35 | 29 | | | | | | | | | |
| 3 - 1/2" | 0.459 | 55.5 | 222 | 188 | 160 | 137 | 117 | 101 | 87 | 75 | 64 | 55 | 47 | 40 | 34 | 28 | | | | | | | | |
| 4 - 7/16" | 0.460 | 55.6 | 223 | 188 | 160 | 137 | 118 | 101 | 87 | 75 | 64 | 55 | 47 | 40 | 34 | 28 | | | | | | | | |
| 6 - 3/8" | 0.510 | 61.9 | 253 | 215 | 183 | 157 | 136 | 117 | 102 | 88 | 77 | 66 | 57 | 50 | 43 | 36 | 31 | | | | | | | |
| 5 - 7/16" | 0.575 | 68.6 | 394 | 338 | 292 | 253 | 221 | 194 | 171 | 151 | 134 | 119 | 106 | 94 | 84 | 74 | 66 | 59 | 52 | | | | | |
| 7 - 3/8" | 0.595 | 71.6 | 413 | 354 | 306 | 266 | 233 | 205 | 180 | 160 | 142 | 126 | 112 | 100 | 89 | 79 | 71 | 63 | 56 | 50 | | | | |
| 4 - 1/2" | 0.612 | 72.7 | 420 | 361 | 312 | 271 | 237 | 208 | 184 | 163 | 144 | 128 | 114 | 102 | 91 | 81 | 73 | 65 | 58 | 51 | 45 | 40 | | |
| 6 - 7/16" | 0.690 | 81.2 | 475 | 408 | 353 | 308 | 270 | 238 | 210 | 187 | 166 | 149 | 133 | 119 | 107 | 96 | 86 | 77 | 69 | 62 | 56 | 50 | 44 | |
| 5 - 1/2" | 0.765 | 89.4 | 482 | 450 | 393 | 343 | 302 | 266 | 236 | 210 | 188 | 168 | 151 | 135 | 122 | 110 | 99 | 90 | 81 | 73 | 66 | 59 | 53 | 48 |
| 7 - 7/16" | 0.805 | 93.7 | 482 | 450 | 414 | 362 | 318 | 281 | 249 | 222 | 199 | 178 | 160 | 144 | 130 | 117 | 106 | 96 | 87 | 79 | 71 | 64 | 58 | 52 |
| 6 - 1/2" | 0.918 | 105.4 | 482 | 450 | 422 | 397 | 363 | 322 | 286 | 255 | 229 | 206 | 185 | 167 | 152 | 137 | 125 | 113 | 103 | 94 | 85 | 78 | 71 | 64 |
| 7 - 1/2" | 1.071 | 120.8 | 482 | 450 | 422 | 397 | 375 | 356 | 334 | 299 | 269 | 242 | 219 | 198 | 180 | 164 | 149 | 136 | 124 | 114 | 104 | 95 | 87 | 80 |

(Includes 10PSF dead load)
Values below lower heavy line indicate web shear controls.
Values above upper heavy line indicate long-time camber less than zero with no superimposed service loads.

## Slab Selection and Material Properties

| | |
|---|---|
| Net Area | 225.78 $in^2$ |
| Moment of Inertia | 1767.90 $in^4$ |
| Centroid From Slab Bottom | 4.00 in |
| Section Modulus, Top | 442.22 $in^3$ |
| Section Modulus, Bottom | 442.22 $in^3$ |
| Web Width | 12.94 in |
| V/s Ratio | 2.13 in |
| Self Weight | 62.2 psf |

| | |
|---|---|
| Strength of Concrete | 6000 psi |
| Strength at Release | 4000 psi |
| Unit Weight of Concrete | 150 pcf |
| Ultimate Steel Strength | 270 ksi |
| Strand Jacking Stress | 202.5 ksi |
| Strand Type | Low Relaxation |
| Grout Joint Requirements | 1707 $ft^2/yd^3$ |

**Self weights are based on grouted section.**